UNIVERSITY OF LIVERPOOL

School of Engineering

Sheet No. 1

INPUT		OUTPUT

-Determine the resistances for the extended end plate shown below:-

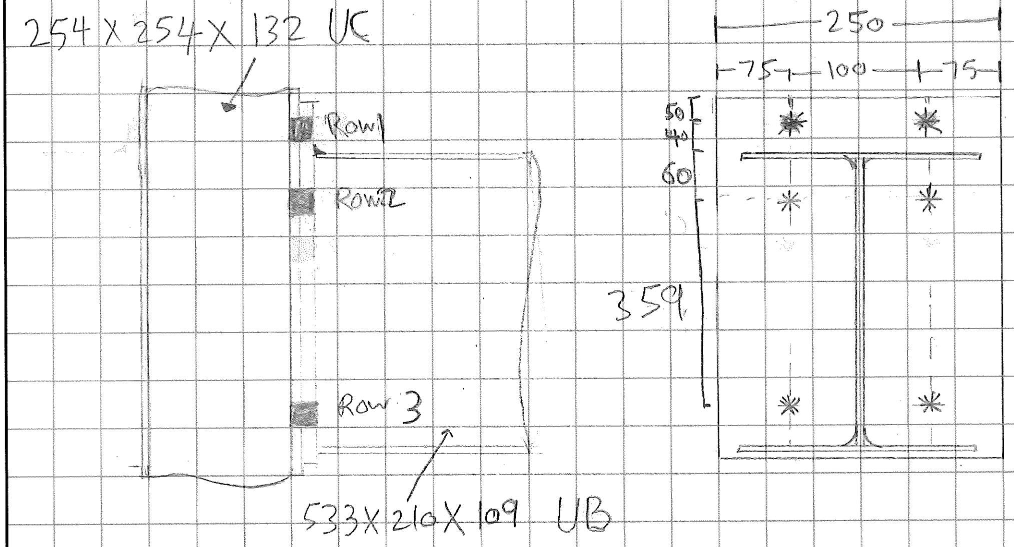

* both colomn and beam in S355
* Bolts: M24 class 8.8
* Welds: Fillet welds: $S_f = 12$ mm, $S_w = 8$ mm
* all units are in mm unless stated otherwise.
* assume No axial force

DESIGNER
Awab Almasrani
201275067

CHECKED BY

INPUT | OUTPUT

Bolted End Plate Moment Connection

Content list

	Sheet No
1) Dimensions and properties	4
2) Tension resistance of bolt rows	6
row 1(A) 2.1A Column flange in bending	6
2.2A colum web in tension	9
2.3A End plate in bending	10
2.4A Beam web in tension	12
Summery of bolt row1	12
row2 (B)	13
2.1B	13
2.2B	13
2.3B	13
2.4B	16
rows 1 and 2 combined (C)	17
2.1C	17
2.2C	19
2.3C	20
Summery of bolt row2	20
Summery of tension resistance	21
3. Compression resistance	21
3.1 Column web in compression	21
3.2 Beam flange/web in compression	23
4. Shear resistance of Column web	23

DESIGNER

CHECKED BY

INPUT | OUTPUT

5. Effective resistance of bolt rows 24
5.1 Plastic Distribution limit 24
5.2 Equilibrium of forces 25

6. Moment resistence of joint 26
7. Bolt shear and Bearing 27
7.1 Bolt shear resistance 27
7.2 Bolt bearing resistance 27

8. Weld Design
8.1 Beam flange to End Plate 28
8.2 Beam web to End Plate 29

9. Summery of Solution 30

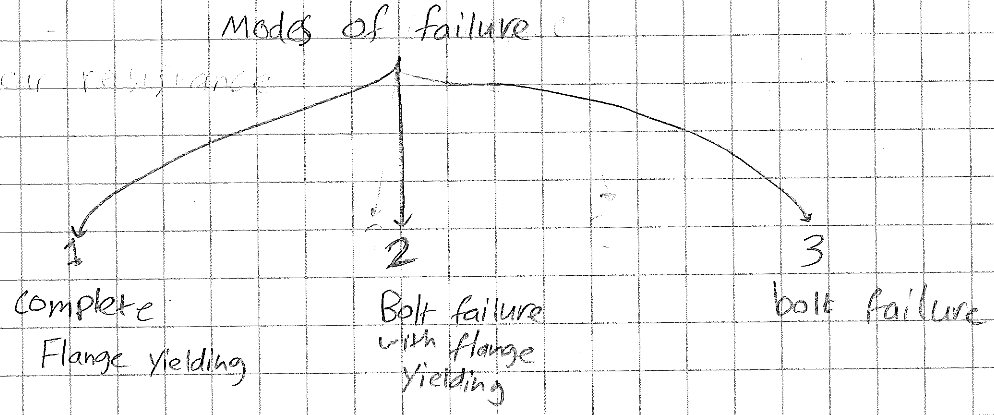

Assumption :-
- Top and middle row to carry tension
also, 28% of their strength is used for shear
- at bottom row, compression and shear is carried.

DESIGNER

CHECKED BY

INPUT		OUTPUT

* Dimensions :-

Blue book

- Column : 254X254X132 UC — Beam 533X210X109 UB

	Column		Beam	
Depth	h_c	276.3 mm	h_b	539.5 mm
Width	b_c	261.3 mm	b_b	210.8 mm
Web thickness	t_{wc}	15.3 mm	t_{wb}	11.6
Flange thickness	t_{fc}	25.3 mm	t_{fb}	18.8
Root radius	r_c	12.7 mm	r_b	12.7
Depth between fillets	d_c	200.3 mm	d_b	476.5
Area	A_c	168 cm^2	A_b	139 cm^2

- End Plate.

Depth	h_p	670 mm
width	b_p	250 mm
Thikkness	t_p	20 mm

- Bolts:

M24 non Preloaded 8.8

BS EN ISO 7091

Diameter of shank	d	24 mm
Diameter of hole	d_0	26 mm
Shear Area	A_s	353
Diameter of washer	d_w	41.6

- Bolt spacings

Column			End Plate	
End disience	–	100 mm	e_x	50 mm
Spacing	w	100 mm	w	100 mm
Edge distance	e_c	80.65 mm	e_p	75 mm
Spacing row 1-2	P_{1-2}	90 mm	P_{1-2}	100 mm
Spacing row 2-3	P_{2-3}		P_{2-3}	90 mm

Spacing row 1-Flange x 40 mm

$\frac{b_c - w}{2} = e_c$

DESIGNER

CHECKED BY

INPUT		OUTPUT

* Material strengths

EC3 3.2.1 Table 3.1

S355 Steel
$t < 40mm$

Yield strength f_y 355 N/mm^2
Ultimate tensile strength f_u 490 N/mm^2

EC3 3.1.1 Table 3.1

bolt strength
8.8 M24 bolts
Nominal yield strength f_{yb} 640 N/mm^2
Ultimate tensile strength f_{ub} 800 N/mm^2

EC3

* Partial factor of safety

for structural steel
γ_{M0} 1
γ_{M1} 1
γ_{M2} 1.1

for bolts, welds
γ_{M2} 1.25

DESIGNER

CHECKED BY

INPUT | OUTPUT

2) tension resistance of bolt rows

row 1 (A)

2.1.A column Flange in bending:-

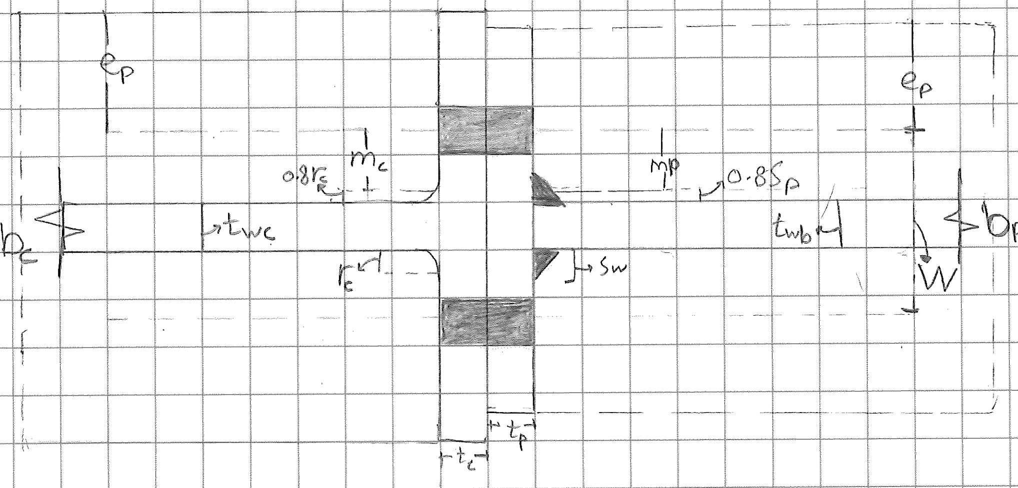

Green book

find $F_{T,1,Rd} = \dfrac{(8n - 2e_w)\,M_{pl,1,Rd}}{2mn - e_w(m+n)}$

$m = m_c = \dfrac{W - t_{wc} - 2\times0.8\,r_c}{2} = \dfrac{100 - 15.3 - 2\times0.8\times12.7}{2} = 32.19\text{mm}$

$e_{min} = \min(e_p\,;e_c) = \min(75;80.65) = 75\text{ mm}$

$M_{pl,1,Rd} = \dfrac{0.25\sum l_{eff,1}\,t_f^2\,f_y}{\gamma_{M0}}$

$f_y = 355$

$t_f = t_{fc} = 25.3\text{ mm}$

Table 2.2 (e)

For Mode 1, $l_{eff} = \min(l_{eff,nc}, l_{eff,cp})$

$l_{eff,nc} = 4m + 1.25e$

$= 4\times32.19 + 1.25\times75 = 222.5\text{ mm}$

$l_{eff,cp} = 2\pi m = 2\pi\times32.19\text{ mm} = 202.26\text{ mm} < 222.5$

$\therefore\ l_{eff_1} = l_{eff,cp} = 202.26$

for mode 2:

$l_{eff_2} = l_{eff,nc} = 222.5\text{ mm}$

DESIGNER

CHECKED BY

INPUT		OUTPUT

Mode 1 resistance

$$F_{T,1,Rd} = \frac{(8n - 2e_w) M_{pl,1,Rd}}{2mn - e_w(m+n)}$$

$m = m_c = 32.19$ mm

$n = e_{min}$ but $\leq 1.25m$

$1.25m = 1.25 \times 32.19 = 40.24$

$e_{min} = 75 < 40.24$mm ✓

$\therefore n = 40.24$ mm

$$M_{pl,1,Rd} = \frac{0.25 \sum l_{eff,1} t_f^2 f_y}{\gamma_{M0}}$$

$= 0.25 \times 202.26 \times 25.3^2 \times 355$

$= 11.49 \times 10^6$ Nmm

BSEN ISO 7091

$e_w = \frac{d_w}{4}$, where d_w is Diameter of washer or width across cornors

$d_w = 39.55$

$e_w = 9.89$ mm

$$F_{T,1,Rd} = \frac{(8 \times 40.24 - 2 \times 9.89)\, 11.49 \times 10^6}{2 \times 32.19 \times 40.24 - 9.89\,(32.19 + 40.24)}$$

$= 1852.2$ KN

Mode 2 resistance

$$F_{T,2,Rd} = \frac{2M_{pl,2,Rd} + n \sum F_{t,Rd}}{m+n}$$

$$M_{pl,2,Rd} = \frac{0.25 \sum l_{eff,2} t_f^2 f_y}{\gamma_{M0}}$$

$$= \frac{0.25 \times 222.5 \times 25.3^2 \times 355}{1}$$

$= 12.64 \times 10^6$ Nmm

DESIGNER

CHECKED BY

INPUT		OUTPUT

to find $\sum F_{t,Rd}$

for a single bolt:

$$F_{t,Rd} = \frac{k_2 f_{ub} A_s}{\gamma_{M2}} \quad \text{, where } k_2 = 0.9$$

$$= \frac{0.9 \times 800 \times 353}{1.25}$$

$$= 203 \times 10^3 \text{ N}$$

For 2 bolts in a row:-

$$\sum F_{t,Rd} = 2 \times 203 \times 10^3$$

$$= 406 \times 10^3 \text{ N}$$

$$F_{T,2,Rd} = \frac{2 \times 12.64 \times 10^6 + 40.24 \times 406 \times 10^3}{32.19 + 40.24}$$

$$= 574.6 \text{ kN}$$

Mode 3

$$F_{T,3,Rd} = \sum F_{t,Rd} = 406 \text{ kN}$$

* Resistance of column flange in bending

$$F_{t,fc,Rd} = \min(F_{T,1,Rd}; F_{T,2,Rd}; F_{T,3,Rd})$$

$$= \min(1852.2; 574.6; 406)$$

$$= 406 \text{ kN}$$

DESIGNER

CHECKED BY

UNIVERSITY OF LIVERPOOL

School of Engineering

INPUT		OUTPUT

2.2A) Column web in tension:-

GB Table 2.5 P17

$$F_{t,wc,Rd} = \frac{\omega\, b_{eff,t,wc}\, t_{wc}\, f_{y,wc}}{\gamma_{M0}}$$

one-sided column

$\therefore \beta = 1$

$\omega = \omega_1$

$$\omega_1 = \frac{1}{\sqrt{1+1.3(b_{eff,t}\, t_{wc}/A_{vc})^2}}$$

for a bolted connection, $b_{eff,t,wc} = L_{eff}$

as $F_{T,2,Rd} < F_{T,1,Rd}$

$L_{eff,2}$ is taken

$b_{eff,t,wc} = L_{eff,2} = 222.5$ mm

$f_{y,wc} = f_y = 355$

$t_{wc} = 15.3$ mm

EC3 6.2.6 3-38

Shear Area $A_{vc} = A - 2bt_f + (t_w + 2r)t_f$

$= 168 - 2 \times 261.3 \times 25.3 + (15.3 + 2 \times 12.7) 25.3$

$= 4608$ mm²

$$\omega_1 = \frac{1}{\sqrt{1 + 1.3(222.5 \times 15.3/4608)^2}}$$

$\omega = \omega_1 = 0.765$

$$F_{t,wc,Rd} = \frac{0.765 \times 222.5 \times 15.3 \times 355}{1}$$

$= 924.3$ KN

DESIGNER

CHECKED BY

INPUT | OUTPUT

2.3A End Plate in Bending

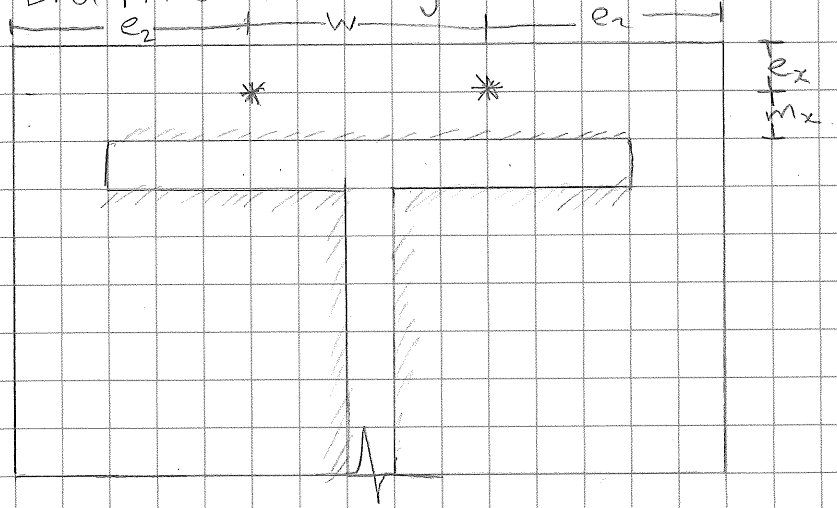

for row 1 which is outside the tension flange:-

$e = e_p = 75$ mm

$e_x = 50$ mm

$m_x = x - 0.8 s_f = 40 - 0.8 \times 12 = 30.4$ mm

for mode 1 $L_{eff,1} = \min(L_{eff,nc} ; L_{eff,cp})$

table 2.2 (a)

$l_{eff,nc}$ is the lesser of:

$\frac{b_p}{2} = \frac{250}{2} = 125$ mm

$4m_x + 1.25e_x = 4 \times 30.4 + 1.25 \times 50 = 184.1$ mm

$2m_x + 0.625e_x + e = 2 \times 30.4 + 0.625 \times 50 + 75 = 167.05$ mm

$2m_x + 0.625e_x + \frac{w}{2} = 2 \times 30.4 + 0.625 \times 50 + \frac{100}{2} = 142.05$ mm

$\therefore L_{eff,nc} = 125$ mm

$L_{eff,cp}$ is the lesser of;

$2\pi m_x = 2\pi \times 30.4 = 191$ mm

$\pi m_x + 2e_x = \pi \times 30.4 + 2 \times 50 = 195.5$ mm

$\pi m_x + w = 195.5$ mm

$\therefore L_{eff,cp} = 191$ mm

As $l_{eff,nc} < L_{eff,cp}$ $\therefore L_{eff,1} = l_{eff,nc} = 125$ mm

DESIGNER

CHECKED BY

INPUT | OUTPUT

For Mode 2 failure

$L_{eff,2} = L_{eff,nc} = 125$ mm

Mode 1 resistance

$$F_{T,1,Rd} = \frac{(8n - 2e_w) M_{pl,1,Rd}}{2mn - e_w(m+n)}$$

$n = e_{min} = e_x = 75$ mm but $n \leq 1.25$

$1.25m = 1.25 \times 30.4 = 38$ mm

$\therefore n = 38$ mm

$m = m_x = 30.4$

$e_w = 9.9$ mm (from before)

$$M_{pl,1,Rd} = \frac{0.25 \sum l_{eff,1} t_p^2 f_y}{\gamma_{M0}}$$

$= 0.25 \times 125 \times 20^2 \times 355 = 4.4375 \times 10^6$ Nmm

$$F_{T,1,Rd} = \frac{(8 \times 38 - 2 \times 9.9) \times 4.4375 \times 10^6}{2 \times 30.4 \times 38 - 9.9(30.4 + 38)}$$

$= 772.17$ KN

Mod 2 resistance

$$F_{T,2,Rd} = \frac{2M_{pl,2,Rd} + n \sum F_{t,Rd}}{m + n}$$

$$M_{pl,2,Rd} = \frac{0.25 \sum l_{eff,2} t_p^2 f_y}{\gamma_{M0}}$$

as $l_{eff,2} = l_{eff,1}$, $M_{pl,1,Rd} = M_{pl,2,Rd} = 4.4375 \times 10^6$ Nmm

DESIGNER

CHECKED BY

UNIVERSITY OF LIVERPOOL

School of Engineering

Sheet No. 12

INPUT		OUTPUT

$$\sum F_{t,Rd} = 406 \times 10^3 N \text{ (as Previously)}$$

$$F_{T,2,Rd} = \frac{2 \times 14.4375 \times 10^6 + 38 \times 406 \times 10^3}{30.4 + 38}$$

$$= 355.31 \text{ KN}$$

Mode 3 resistance

$$F_{T,3,Rd} = \sum F_{t,Rd} = 406 \text{ KN}$$

* Resistance of End Plate in bending:

$$F_{t,ep,Rd} = \min(F_{T,1,Rd} ; F_{T,2,Rd} ; F_{T,3,Rd})$$

$$= \min(772.17 ; 355.31 ; 406)$$

$$= 355.31 \text{ KN}$$

2.4A Beam web in Tension

bolt row 1 is in the extension of the end plate. therfore, the tension of this bolt row is not applicable on the beam web.

* Summery of resistence of bolt row 1
the smallest value of:

column Flange in bending:	406 KN
column web in tension:	924.3 KN
End Plate in bending	355.31 KN

∴ resistance of bolt row 1 = 355.31 KN

DESIGNER

CHECKED BY

INPUT | OUTPUT

Bolt row 2
considering bolt row 2 alone (B)

2.1B column flange in bending

with similer parameter, the resistance of column flange in bolt row 2 is the same of the resistanc of bolt row 1 (mode 2)

$\therefore F_{t,fc,Rd} = 574.6$ kN

2.2B column web in tension

Same for bolt row 1
$F_{t,wc,Rd} = 924.3$ kN

2.3B End Plate in bending

-Bolt row 2 is the first below beam flange

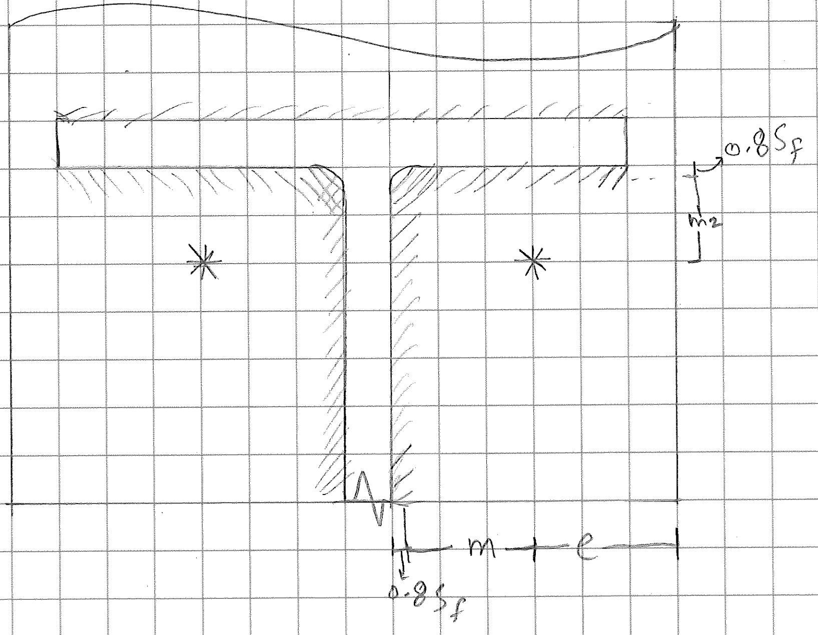

DESIGNER

CHECKED BY

UNIVERSITY OF LIVERPOOL

School of Engineering

Sheet No. 14

INPUT		OUTPUT

$m = m_p = w - t_{wb} - 2 \times 0.8 s_w \times 0.5 = (100 - 11.6 - 1.6 \times 8)/2$
$= 37.8$ mm

$e = e_p = 75$ mm

$m_2 = 60 - t_{fb} - 0.8 s_f = 60 - 18.8 - 0.8 \times 12 = 31.6$ mm

for effective length calculation:

GB — to find a from Appendix G.

$\lambda_1 = \frac{m}{m+e}$ $\quad$ $\lambda_2 = \frac{m_2}{m+e}$

$= \frac{37.8}{37.8+75}$ $\quad$ $= \frac{31.6}{37.8+75}$

$= 0.335$ $\quad$ $= 0.280$

by interpolation, $a = 7.5$

Table 2.2 (c) — $l_{eff,cp} = 2\pi m = 2\pi \times 37.8 = 237.5$ mm

$l_{eff,nc} = am = 7.5 \times 37.8 = 283.5$ mm

$l_{eff,1} = \min(l_{eff,cp}; l_{eff,nc}) = 237.5$

$l_{eff,2} = l_{eff,nc} = 283.5$

<u>Mode 1 Resistance</u>

$F_{T,1,Rd} = \frac{(8n - 2e_w) M_{pl,1,Rd}}{2mn - e_w(m+n)}$

$n = e_{min}$ but $n \leq 1.25m$

$1.25m = 1.25 \times 37.8 = 47.25$ mm

$e_{min} = 75$ mm

$\therefore n = 47.25$

$e_w = 9.9$ mm

DESIGNER

CHECKED BY

INPUT		OUTPUT

$$M_{pl,1,Rd} = \frac{0.25 \Sigma \ell_{eff,1} t_f^2 f_y}{\gamma_{M0}}$$

$$= \frac{0.25 \times 237.5 \times 25.3^2 \times 355}{1}$$

$$= 13.492 \times 10^6 \ Nmm$$

$$F_{T,1,Rd} = \frac{(8 \times 47.25 - 2 \times 9.9)\, 13.492 \times 10^6}{2 \times 37.8 \times 47.25 - 9.9(37.8 + 47.25)}$$

$$= 1770.2 \ KN$$

Mode 2 Resistance

$$F_{T,2,Rd} = \frac{2 M_{pl,2,Rd} + n \Sigma F_{t,Rd}}{m + n}$$

$F_{t,Rd} = 203 \times 10^3 \ N$ (from before)

$$M_{pl,2,Rd} = 0.25 \times 283.5 \times 25.3^2 \times 355$$

$$= 16.1 \times 10^6 \ Nmm$$

$$F_{T,2,Rd} = \frac{2 \times 16.1 \times 10^6 + 47.25 \times 203 \times 10^3 \times 2}{37.8 + 47.25}$$

$$= 604.275 \ KN$$

Mode 3 Resistance

$$F_{T,3,Rd} = \Sigma F_{t,Rd} = 406 \ KN$$

* Resistance of End Plate in bending $= \min(F_{T,1,Rd} ; F_{T,2,Rd} ; F_{T,3,Rd})$

$= \min(1770.2 ; 604.275 ; 406)$

$= 406 \ KN$

DESIGNER

CHECKED BY

INPUT		OUTPUT

2.4B Beam web in tension

$$F_{t,wb,Rd} = \frac{\omega\, b_{eff,t,wc}\, t_{wc}\, f_{y,b}}{\gamma_{M0}}$$

$b_{eff,t,wc} = L_{eff}$

as $L_{eff,cp} < L_{eff,nc}$

$b_{eff,t,wc} = L_{eff} = l_{eff,cp} = 237.5$

One-sided Column

$\therefore \quad \beta = 1$

$\omega = \omega_1$

Sheet No.9

$$\omega_1 = \frac{1}{\sqrt{1 + 1.3\left(b_{eff}\, t_{wc} / A_{vc}\right)^2}}$$

$$= \frac{1}{\sqrt{1 + 1.3\left(237.5 \times 15.3\right) / 4608)^2}}$$

$\omega = 0.743$

$$F_{t,wb,Rd} = \frac{0.743 \times 237.5 \times 15.3 \times 355}{1}$$

$= 959.26$ KN

DESIGNER

CHECKED BY

UNIVERSITY OF LIVERPOOL

School of Engineering

Sheet No. 17

INPUT		OUTPUT

Tension resistance of : rows 1 and 2 combined (C)

2.1C column flange in bending

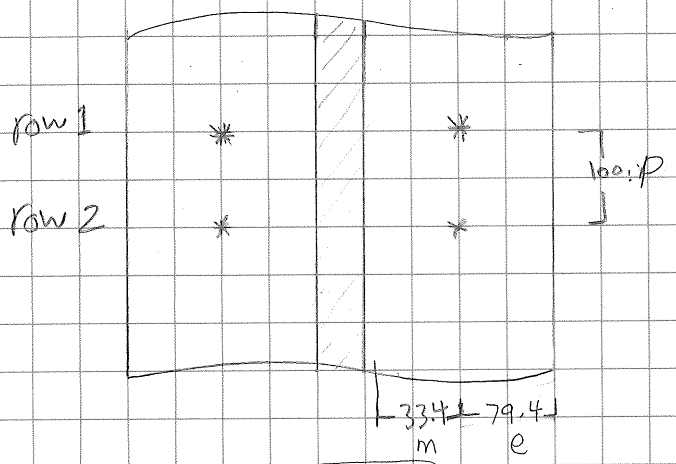

$e_1 = b_c - e$
$= 261.3 - 79.4$
$= 182$ mm

EN 1993-1-8 Table 6.4 OR Table 2.3a GB

L_{eff} for bolt row 1 acting in a group

$L_{eff,nc}$ is the lesser of

$2m + 0.625e + 0.5p = 2 \times 33.4 + 0.625 \times 79.4 + 0.5 \times 100$
$= 166.425$

$e_1 + 0.5p = 182 + 50 = 232$ mm

$\therefore L_{eff,nc} = 166.425$ mm

$L_{eff,cp}$ is the smallest of

$\pi m + p = \pi \times 33.4 + 100 = 204.93$ mm

$2e_1 + p = 2 \times 182 + 100 = 464$ mm

$\therefore L_{eff,cp} = 204.93$

for bolt row 2 is the same as for row 1

$\sum L_{eff,nc} = 2 \times 166.43 = 333$ mm

$\sum L_{eff,cp} = 410$ mm

DESIGNER

CHECKED BY

UNIVERSITY OF LIVERPOOL

School of Engineering

INPUT		OUTPUT

for Mode 1:

$$\Sigma L_{eff,nc} < \Sigma L_{eff,cp}$$

$$\therefore \quad L_{eff,1} = \Sigma L_{eff,nc} = 333 \text{ mm}$$

for mode 2:

$$L_{eff,2} = \Sigma L_{eff,nc} = 333 \text{ mm}$$

Mode 1 resistance:

$$F_{T,1,Rd} = \frac{(8n - 2e_w) M_{pl,1,Rd}}{2mn - e_w(m+n)}$$

$$M_{pl,1,Rd} = \frac{0.25 \Sigma l_{eff,1} t_f^2 f_y}{\gamma_{M0}}$$

$$= 0.25 \times 333 \times 25.3^2 \times 355$$

$$= 18.917 \times 10^6 \text{ Nmm}$$

Sheet No. 6

$m = 32.2$ mm

$n = 40.24$ m

$e_w = 9.9$ mm

$$F_{T,1,Rd} = \frac{(8 \times 40.24 - 2 \times 9.9) \times 18.917 \times 10^6}{2 \times 32.2 \times 40.24 - 9.9(32.2 + 40.24)}$$

$$= 3049.25 \text{ KN}$$

Mode 2 resistance

$$F_{T,2,Rd} = \frac{2 M_{pl,2,R} + n \Sigma F_{t,Rd}}{m + n}$$

$F_{t,Rd} = 203$ KN

$\Sigma F_{t,Rd} = 4 \times 203 = 812$ KN

DESIGNER

CHECKED BY

INPUT | OUTPUT

As $l_{eff,1} = l_{eff,2}$

$$M_{pl,1,Rd} = M_{pl,2,Rd}$$

$$M_{pl,2,Rd} = 18.917 \times 10^6 \ Nmm$$

$$F_{T,2,Rd} = \frac{2 \times 18.917 \times 10^6 + 40.24 \times 812 \times 10^3}{32.2 + 40.24}$$
$$= 973.34 \ KN$$

Mode 3 resistance

$$F_{T,3,Rd} = \sum F_{t,Rd} = 812 \ KN$$

* Resistance of Column flange

$$= \min(F_{T,1,Rd} \ ; F_{T,2,Rd} \ ; F_{T,3,Rd})$$
$$= \min(3049.25 \ ; 973.34 \ ; 812)$$
$$= 812 \ KN$$

2.2C Column Web in tension

$$F_{t,wc,Rd} = \frac{\omega \ b_{eff,twc} \ t_{wc} \ f_{y,wc}}{\gamma M_0}$$

$$b_{eff,twc} = \sum l_{eff}$$
$$= 333 \ mm$$

$$\omega = \omega_1 = \frac{1}{\sqrt{1 + 1.3 (b_{eff} \ t_{wc} / A_{vc})^2}}$$

$$= \frac{1}{\sqrt{1 + 1.3 \left(\frac{333 \times 15.3}{4608} \right)^2}} = 0.62$$

DESIGNER

CHECKED BY

UNIVERSITY OF LIVERPOOL

School of Engineering

Sheet No. 20

INPUT		OUTPUT

$F_{t,wc,Rd} = 0.62 \times 333 \times 15.3 \times 355$
$= 1121.39$ KN

2.3C End Plate in Bending

No group made for the end plate

Summery of resistance of rows 1+2 combined
is the smallest of:-

Column flange in bending	812 KN
Column web in tension	1121.39 KN

∴ resistance of rows (1)+(2) = 812 KN
and the resistance of bolt row is
limited to:
= resistence of group - resistance of row 1
Sheet 12 = 812 − 355.31 = 456.7 KN

Summer of resistance of bolt row 2
the smallest of:-

S13	Column flange in Bending	574.6 KN
	Column web in tension	924.3 KN
S16	Beam web in tension	959.3 KN
S15	End plate in bending	406 KN
S20	Colum Side as part of a group	456.7 KN

* ∴ resistance of bolt row 2 = 406 KN

DESIGNER

CHECKED BY

INPUT | OUTPUT

Summery of tension resistence in KN

row	Column flange	Column Web	End plate	Beam web	Min	Effective
①	406	924.3	355.31	—	355.31	355.31
②	574.6	924.3	406	959.3	406	
①+②	812	1121.39	—	—	812	457
②						406

3. Compression resistance:

3.1 Column web in compression

$$F_{c,wc,Rd} = \frac{\omega k_{wc} b_{eff} t_{wc} f_{y,wc}}{\gamma_{M0}} \quad (\text{for crushing})$$

but

$$F_{c,wc,Rd} \leq \frac{\omega k_{wc} b_{eff} t_{wc} f_{wc}}{\gamma_{M1}} \quad (\text{for buckeling})$$

For a bolted end plate:

$$b_{eff} = t_{fb} + 2 S_f + 5(t_{fc} + S) + S_p$$

$$S = r_c = 12.7 \quad , S_p = 2t_p = 40 \text{ mm}$$

$$b_{eff} = 18.8 + 2 \times 12 + 5(25.3 + 12.7) + 40$$
$$= 272.8$$

S_p is the length obtained by dispersion at 45° = $2 \times t_p$

DESIGNER

CHECKED BY

INPUT		OUTPUT

to verify the Depth of the End Plate h_p is sufficient of force despersion:

$h_p \geq e_x + x + h_b + S_f + t_p$

$= 50 + 40 + 539.5 + 12 + 20$

$= 661.5$

Assumed $h_p = 670 > 661.5$ OK

ρ reduction factor for plate buckelling

Plate slenderness $\overline{\lambda}_p = 0.932 \sqrt{\frac{b_{eff}\, d_c\, f_{y,wc}}{E\, t_{wc}^2}}$

$= 0.932 \sqrt{\frac{272.8 \times 200.3 \times 355}{210 \times 10^3 \times 15.3^2}}$

$= 0.585$

if $\overline{\lambda}_p \leq 0.72$, $\rho = 1$

$0.585 \leq 0.72 \therefore \rho = 1$

$\omega = \omega_1 = \frac{1}{\sqrt{1 + 1.3(b_{eff}\, t_{wc} / A_{vc})^2}} = \frac{1}{\sqrt{1 + 1.3\left(\frac{272.8 \times 15.3}{4608}\right)^2}}$

$= 0.6956$

K_{wc} is the reduction factor for the compression in the column web, assume $k_{wc} = 1$

$F_{c,wc,Rd} = 0.6956 \times 272.8 \times 15.3 \times 355$

$= 1030.72$ KN

DESIGNER

CHECKED BY

INPUT		OUTPUT

3.2 Beam flange and web in compression

$$F_{c,fb,Rd} = \frac{M_{c,Rd}}{h - t_{fb}}$$

- assume design shear force doesn't reduce $M_{c,Rd}$

1) Design resistance of the beam $M_{c,Rd}$ =

P363 C-80

From the blue book,

$M_{c,y,Rd} = 750$ KNm $= 750 \times 10^6$ Nmm

$h_b = 539.5$ mm

$t_{fb} = 18.8$

$$F_{c,fb,Rd} = \frac{750 \times 10^6}{539.5 - 18.8} = 1440.37 \text{ KN}$$

Summery of compression resistance

Column web	1030.72	KN
beam flange	1440.37	KN

4. Shear resistance of column web

sheet 9

$$V_{wp,Rd} = \frac{0.9 f_y A_{vc}}{\sqrt{3} \times \gamma_{M0}}, \quad A_{vc} = 4608 \text{ mm}^2$$

$$= \frac{0.9 \times 355 \times 4608}{\sqrt{3}}$$

$= 850$ KN

DESIGNER

CHECKED BY

INPUT		OUTPUT

5.1 Plastic Distribution limit

5. Effective resistance of bolt rows

Previously calculated

Sheet 21

$F_{t1,Rd} = 355.31$

$F_{t2,Rd} = 406$ KN

(1C) BS EN 1993-1-8 P.88

the effective resistance should be reduced if one of the higher rows exceeds $1.9\, F_{t,Rd}$

Sheet 8

$F_{t,Rd} = 203 \times 10^3$ N

$1.9\, F_{t,Rd} = 385.7$ KN $< F_{t2,Rd}$

$\therefore F_{t2,Rd}$ is limited to 385.7 KN

check for reduction

$$t_{fc}\,;\ t_p \leq \frac{d}{1.9}\sqrt{\frac{f_{ub}}{f_{y,p}}}$$

$t_p = 20$, $t_{fc} = 25.3$

$$\frac{d}{1.9}\sqrt{\frac{f_{ub}}{f_{y,p}}} = \frac{24}{1.9}\sqrt{\frac{800}{355}} = 18.96 < 20\,;\,25.3$$

$\therefore$ reduction is Needed

DESIGNER

CHECKED BY

INPUT		OUTPUT

5.2. Equillibrium of forces.

horizental * tensile force + axial compression in the beam ≤ resistance of compression zone

Vertical * design shear ≤ shear resistenc of coulmn web

$\sum F_{tr,Rd} + N_{Ed} = F_{c,Rd}$

as ther is NO Axial compression in the beam

$N_{Ed} = 0$

$\sum F_{tr,Rd} = F_{c,Rd}$

total of effective tension resistance $\sum F_{tr,Rd}$

Sheet 21 $\sum F_{tr,Rd} = 355.31 + 406$
$= 761.31$ KN

Sheet 23 Column web compression resistance $F_{c,Rd} = 1030.72$ KN > 761.31

\# Satisfies requirement

* for vertical equllibrium

shear resistance of column web

$V_{wp,Rd} = 850$ KN

$\sum$ Tensile Forces inducing shear $= 761.31 \leq 850$ KN

\# OK

DESIGNER

CHECKED BY

UNIVERSITY OF LIVERPOOL

School of Engineering

INPUT		OUTPUT

6. Moment resistance of joint

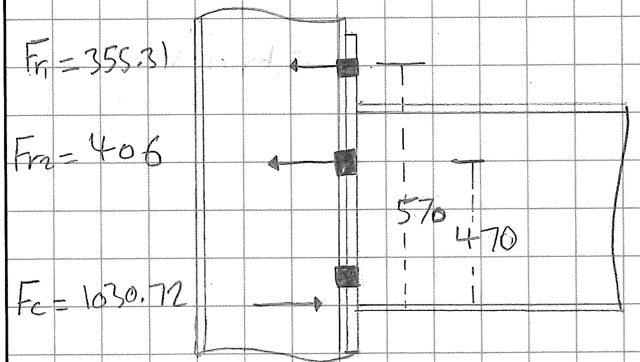

Assuming centre of bottom flange to be centre of compression

$h_{r1} = h_b - \frac{t_{fb}}{2} + x = 539.5 - \frac{18.8}{2} + 40$

$= 570 \text{ mm}$

$h_{r2} = h_{r1} - 100 = 470 \text{ mm}$

taking moment about centre of compression
Moment resistance of the joint is:

$M_{j,Rd} = h_{r1} \times F_{r1} + h_{r2} \times F_{r2}$

$= 570 \times 355.31 + 470 \times 406$

$= 393.3 \text{ KNm}$

DESIGNER

CHECKED BY

INPUT | OUTPUT

7. Bolt Bearing and shear

7.1 Shear ressisence of bolts

for a single bolt

EC3

$$F_{v,Rd} = \frac{a_v f_{ub} A_s}{\gamma_{M2}}$$

for 8.8 bolts, $a_v = 0.6$, $\gamma_{M2} = 1.25$

BS 4190 P.19

for M24, tensile stress Area $A_s = 353$

$$F_{v,Rd} = \frac{0.6 \times 800 \times 353}{1.25} = 135.552\ KN$$

assume bottom bolt to provide full shear strength and tension bolts to provid 28% of their shear strength :

Total shear resistance $= 2 \times 135.552 + 4 \times 0.28 \times 135.552$
$= 423\ KN$

7.2 Bearing resistance of bolts

Bearing ressistenc of End Plate

$$F_{b,Rd} = \frac{K_1 a_b f_u d t}{\gamma_{M2}}$$

$$K_1 = \min\left(2.8\frac{e_2}{d_0} - 1.7 ; 2.5\right)$$

$$= \min\left(2.8 \times \frac{75}{26} - 1.7 ; 2.5\right) = \min(6.377 ; 2.5)$$
$$= 2.5$$

$$a_b = \min\left(\frac{P_1}{3d_0} - \frac{1}{4} ; \frac{e_1}{3d_0} ; \frac{f_{ub}}{f_u} ; 1\right)$$

$$= \min\left(\frac{100}{3 \times 26} - 0.25 ; \frac{50}{3 \times 26} ; \frac{800}{490} ; 1\right)$$

$$= \min(1.03 ; 0.641 ; 1.63 ; 1) = 0.641$$

$$F_{b,Rd} = \frac{2.5 \times 0.641 \times 490 \times 24 \times 20}{1.25} = 301.53\ KN$$

DESIGNER

CHECKED BY

INPUT		OUTPUT

bearing resistance on column flange:

$$F_{b,Rd} = \frac{k_1 a_b f_u d t_{fc}}{\gamma_{M2}}$$

$k_1 = 2.5$
$a_b = 1$

$$F_{b,Rd} = \frac{2.5 \times 1 \times 490 \times 24 \times 25.3}{1.25}$$
$= 595.056$ KN

Bearing resistance of bolts = min (End Plate Bearing ; Column flange)
= min (301.53 ; 595.056)
= 301.53 KN > 135.552 (shear)
∴ Shear is more critical than bearing
Total bearing resistance = $2 \times 301.53 + 4 \times 0.28 \times 301.53$
= 940.77 KN

8. Design of welds

$$F_{vw,Rd} = \frac{a f_u / \sqrt{3}}{\beta_w \gamma_{M2}}$$

for S355, $\beta_w = 0.9$
$a = 0.75$, $\gamma_{M2} = 1.25$

DESIGNER

CHECKED BY

UNIVERSITY OF LIVERPOOL

School of Engineering

Sheet No. 29

INPUT		OUTPUT

8.1 Beam flange to end Plate:-

the weld is assumed to develop its full strength

∴ $F_{w,Rd} \geq$ total tension forces

$$F_{w,Rd} = \frac{0.7 \times 12 \times 430/\sqrt{3}}{0.9 \times 1.25} = 1853.68 \text{ N/mm}$$

total weld resistance = 1853.68 X 250
= 463.42 KN

total tension force = 761.31 KN > 463.42
fails

reduction of force is Needed
OR Larger weld size.
OR add weld on below top flange:
check ↗

New weld length = 2 X 250 = 500 m

total weld resistance = 1853.68 X 500
= 926.84 KN > 761.31
OK

8.2 Beam web to end Plate
$S_w = 8$ mm < $S_f = 12$

$$F_{vw,Rd} = \frac{0.7 \times 8 \times 430/\sqrt{3}}{0.9 \times 1.25} = 1235.78 \text{ N/mm}$$

weld length needed to tranfer tensile forces

$1235.78 \times L_{eff} \times 2 = 761.31 \times 10^3$ N

$L_{eff} = 308$ m

Say = 310 mm

beam depth $h_b = 539.5 > 310$ mm # OK

DESIGNER

CHECKED BY

INPUT | OUTPUT

Summery of design

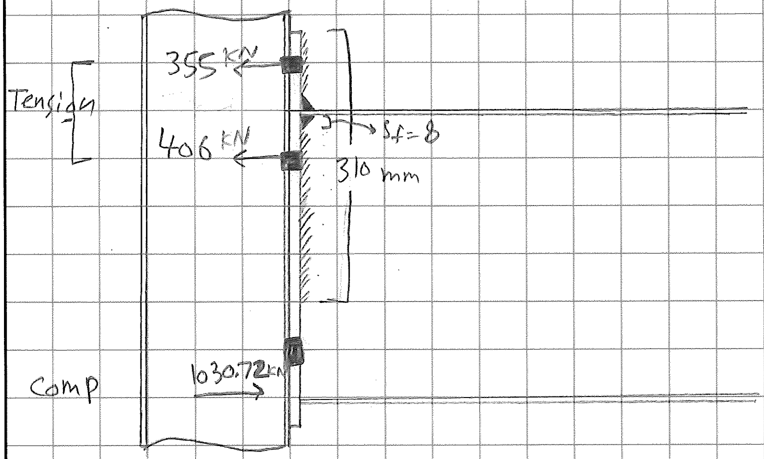

Final Design Shear resistance = 423 kN
" " Moment " = 393.3 KNm

Adjusments made: - adding weld → below top flange
- limiting weld → along Beam web

DESIGNER

CHECKED BY